Santoemma
Professional Cleaning Machines

BOCCHETTA A MANO IN PLASTICA MOD. NS10PN-M E NS10PN (INN. METALLO/PLASTICA) **TAVOLA 16**
PLASTIC HAND TOOL MOD. NS10PN-M AND NS10PN (METAL/PLASTIC COUPLING) **TABLE 16**

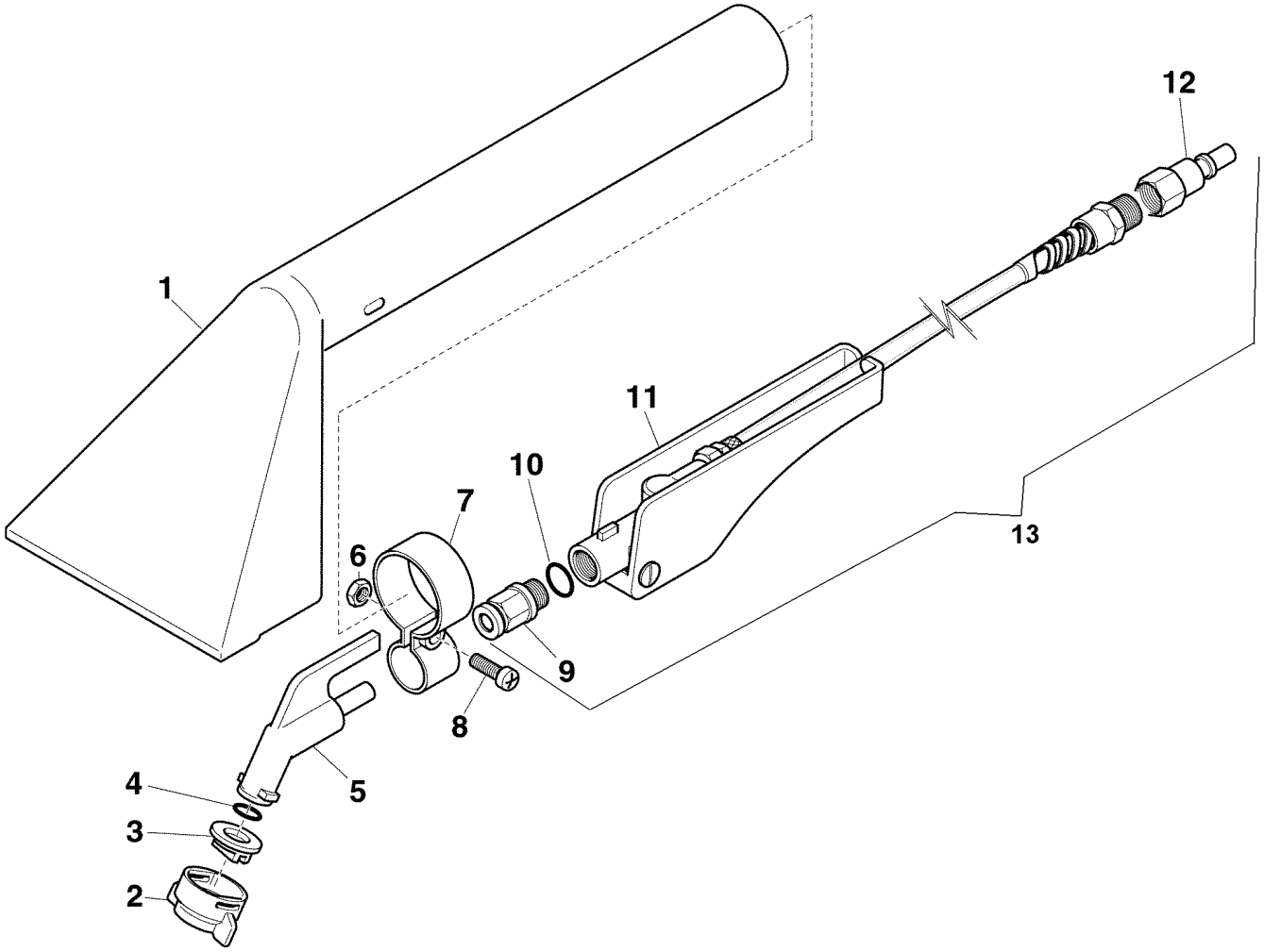

rif	codice	descrizione	description
1	3280	BOCCHETTA IN PLASTICA	PLASTIC BODY
2	7180	GHIERA PER UGELLO	RING NUT FOR NOZZLE
3	730	UGELLO 015/80	NOZZLE 015/80
4	3209	OR 7,66 x 1,78	O-RING 7,66 x 1,78
5	3281	GOMITO	ELBOW
6	525	DADO D.5	NUT D.5
7	319	FASCETTA	VALVE LOCK
8	504	VITE TC+ 5x20	SCREW TC+ 5x20
9	750	INNESTO AUTOM. D.8 - M.1/4	AUTOMATIC COUPLING D.8 – M.1/4
10	137	OR 1/4"	O-RING 1/4"
11	3200-INN	RUBINETTO COMPLETO, SENZA INNESTI	COMPLETE SOLUTION VALVE, WITHOUT COUPLINGS
12	689-PE	INNESTO RAPIDO M. ATT. F.1/4” - METALLO	QUICK DISCONNECT MALE, ATT. F.1/4” - METAL
	727	INNESTO RAPIDO M. ATT. F.1/4” - PLASTICA	QUICK DISCONNECT MALE, ATT. F.1/4” - PLASTIC
13	3200C-M	RUBINETTO COMPLETO, INNESTO METALLO	COMPLETE SOLUTION VALVE, METAL COUPLING
	3200C	RUBINETTO COMPLETO, INNESTO PLASTICA	COMPLETE SOLUTION VALVE, PLASTIC COUPLING

July 2008

Santoemma srl
Via Piave, 22/C - 20016 PERO (Milano) – Italy
Tel. +39.02.3391 2487 Fax +39.02.3391 2538
www.santoemma.com E-mail: santoemma@santoemma.com