Revision No.	A.1

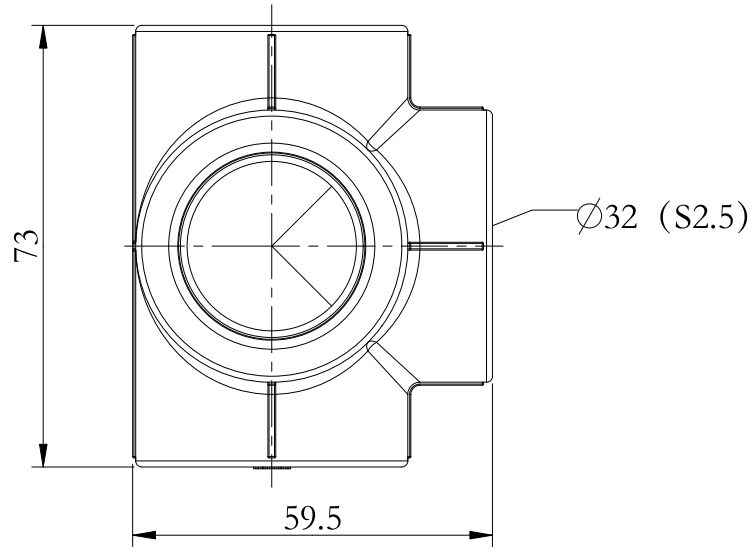

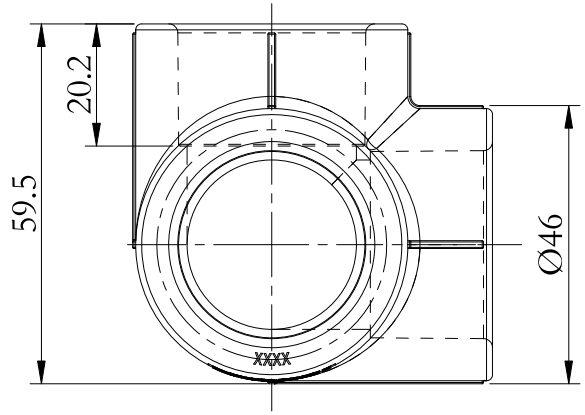

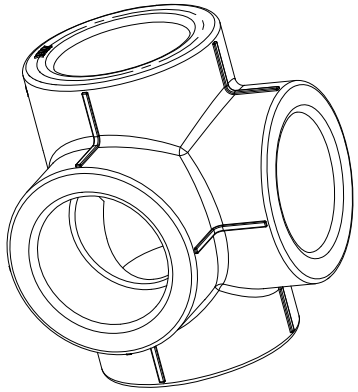

Mark	Qty	Change Record	AUTH	Date

★	Critical Dim.	Proofread by	Weihaoning
( )	Reference Dim.	Checked by	Diaozhenbin
Drawn by	Qiubanglong	Approved by	Linxiyong
Process designed by	Chenyongde	Date	2023.08.28

Material	PP-R			
Frame	Projection	Unit	NW(g)	Scale
A4		mm	75.4	1: 1
Sheet 1		0f 1		

RIIFO

corner cross PP-R 32-32-32-32

1100043467