卸荷阀 Unloading valve

1#

1#(2)

2#

3#

4#

5#

6#/7#

8#

9#

10#

Model	1#	2#	2#	4#	5#	6#	7#	8#	9#	10#
Max.pressure	30MPa	20.6MPa	20.6MPa	36MPa	30MPa	25MPa	25MPa	39MPa	60MPa	56MPa
Max.flow	200L/min	200L/min	80L/min	52L/min	25L/min	32L/min	32L/min	40L/min	100L/min	100L/min
Inlet	G 1”	G 3/4”	G 1/2”	G 3/8”	G 3/4”	/	/	G 3/8”	G 1/2”	G 1/2”
Outlet	G 1”	/	G 1/2”	G 3/8”	G 3/8” Q3/8	M22*1.5	G 3/8”	G 3/8”	G 1/2”	/
Bypass	G 1”	G 1/2”	G 1/2”	G 3/8”	/	M22*1.5	G 3/8”	G 1/2”	G 1/2”	G 1/2”

1#

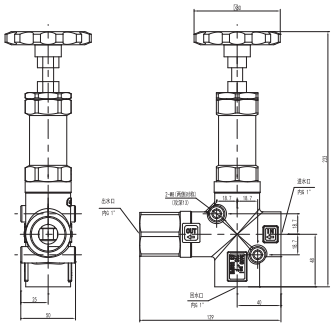

2#

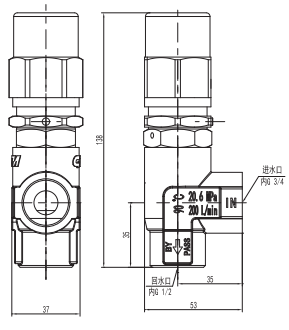

3#

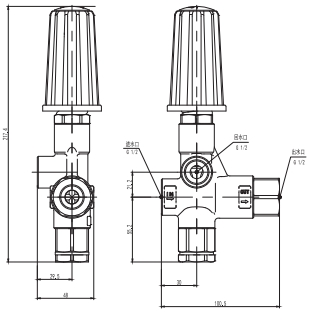
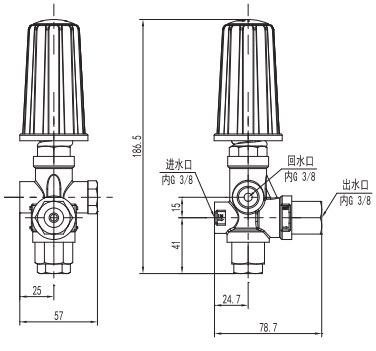
4#