2SC2068 SILICON NPN TRIPLE DIFFUSED TYPE

COLOR TV CHROMA OUTPUT APPLICATIONS.

FEATURES:

. High Voltage : V_{CEO}=300V

. Small Collector Output Capacitance : C_{ob}=4.0pF (Max.)

Unit in mm

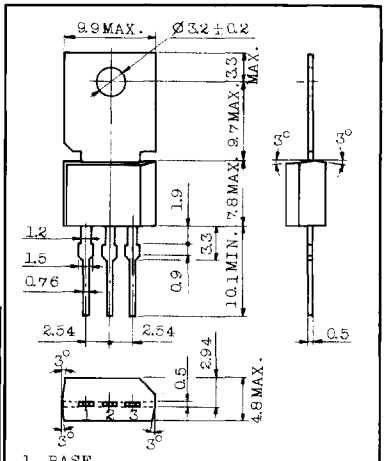

JEDEC	TO-202
EIAJ	—
TOSHIBA	2-10F1B

Weight :1.4g

MAXIMUM RATINGS (Ta=25°C)

CHARACTERISTIC	SYMBOL	RATING	UNIT
Collector-Base Voltage	V_{CBO}	300	V
Collector-Emitter Voltage	V_{CEO}	300	V
Emitter-Base Voltage	V_{EBO}	5	V
Collector Current	I_C	50	mA
Base Current	I_B	20	mA
Collector Power Dissipation	P_C	1.5	W
Junction Temperature	T_j	150	°C
Storage Temperature Range	T_{stg}	-55~150	°C

ELECTRICAL CHARACTERISTICS (Ta=25°C)

CHARACTERISTIC	SYMBOL	TEST CONDITION	MIN.	TYP.	MAX.	UNIT
Collector Cut-off Current	I_{CBO}	V_{CB}=240V, I_E=0	-	-	1.0	μA
Emitter Cut-off Current	I_{EBO}	V_{EB}=5V, I_C=0	-	-	1.0	μA
DC Current Gain	$h_{FE}(1)$	V_{CE}=10V, I_C=0.5mA	20	-	-	
	$h_{FE}(2)$	V_{CE}=10V, I_C=20mA	30	-	200	
Collecotr-Emitter Saturation Voltage	$V_{CE(sat)}$	I_C=10mA, I_B=1mA	-	-	1.0	V
Transition Frequency	f_T	V_{CE}=20V, I_C=20mA	75	95	-	MHz
Collector Output Capacitance	C_{ob}	V_{CB}=20V, I_E=0, f=1MHz	-	-	4.0	pF

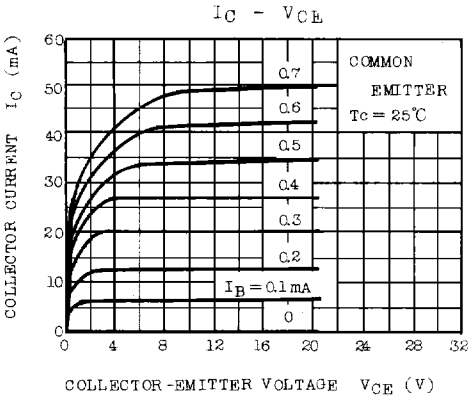
I_C - V_{CE}
COMMON EMITTER
Tc = 25℃
0.7
0.6
0.5
0.4
0.3
0.2
I_B = 0.1 mA
0
COLLECTOR CURRENT I_C (mA)
COLLECTOR-EMITTER VOLTAGE V_{CE} (V)

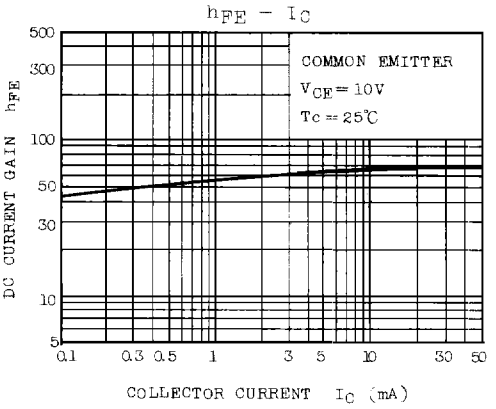
h_{FE} - I_C
COMMON EMITTER
V_{CE} = 10V
Tc = 25℃
DC CURRENT GAIN h_{FE}
COLLECTOR CURRENT I_C (mA)

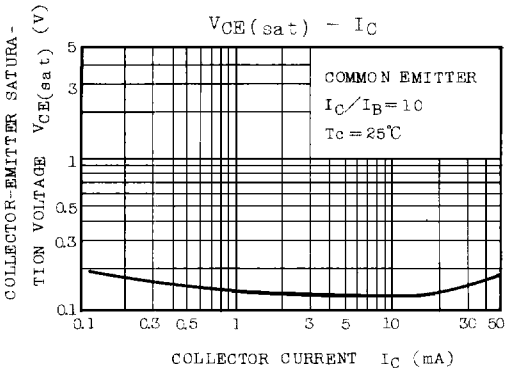
$V_{CE(sat)}$ - I_C
COMMON EMITTER
I_C/I_B = 10
Tc = 25℃
COLLECTOR-EMITTER SATURATION VOLTAGE $V_{CE(sat)}$ (V)
COLLECTOR CURRENT I_C (mA)

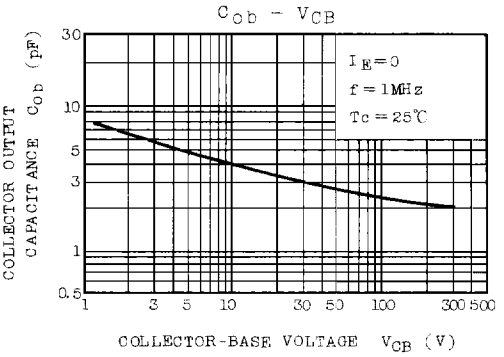
C_{ob} - V_{CB}
I_E = 0
f = 1MHz
Tc = 25℃
COLLECTOR OUTPUT CAPACITANCE C_{ob} (pF)
COLLECTOR-BASE VOLTAGE V_{CB} (V)