Any unauthorized use of this drawing, copying or passing on to third parties requires the explicit approval of ebm-papst Mulfingen GmbH & Co. KG
Any violations of this shall be prosecuted in Civic and Penal Court

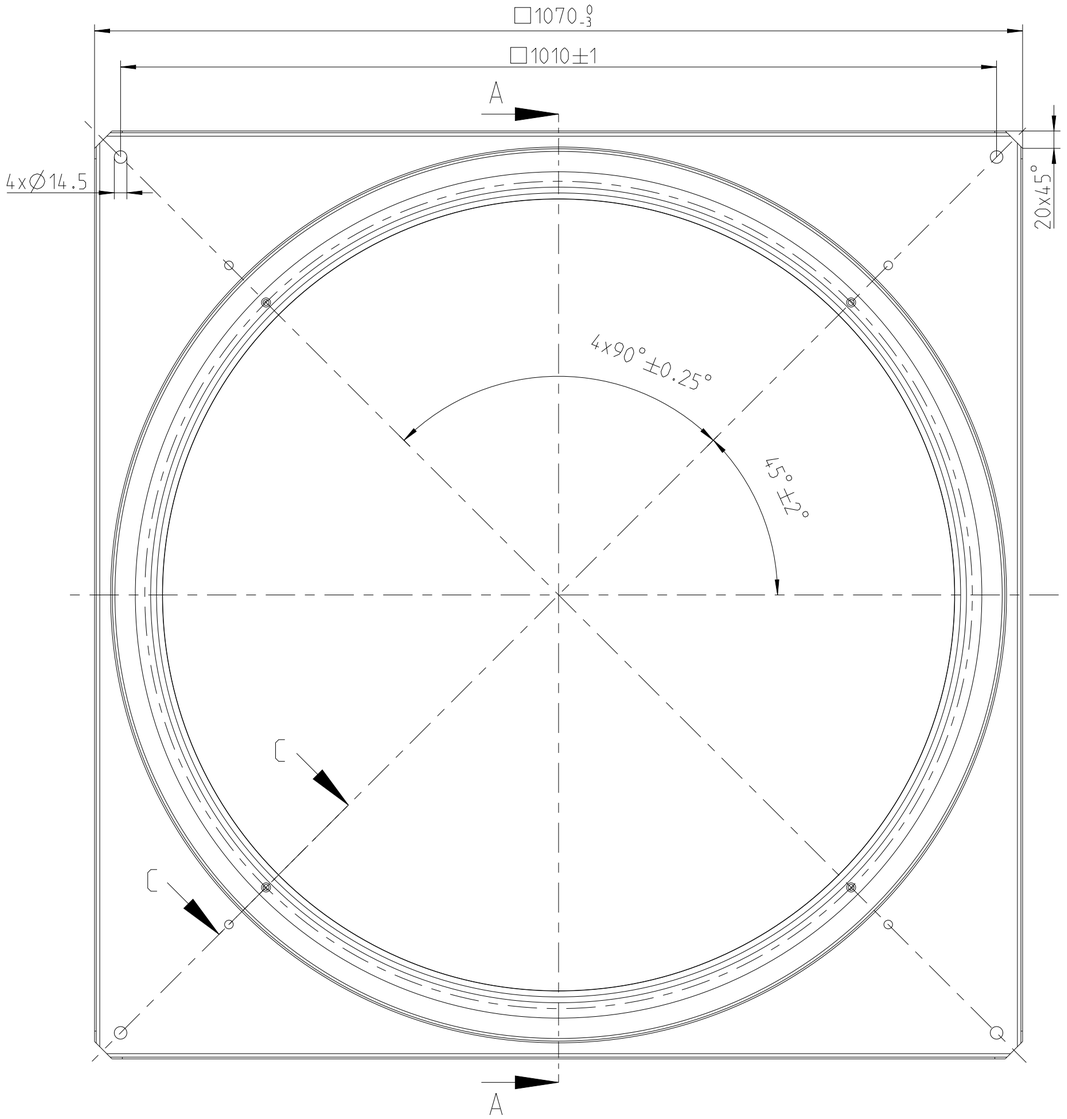

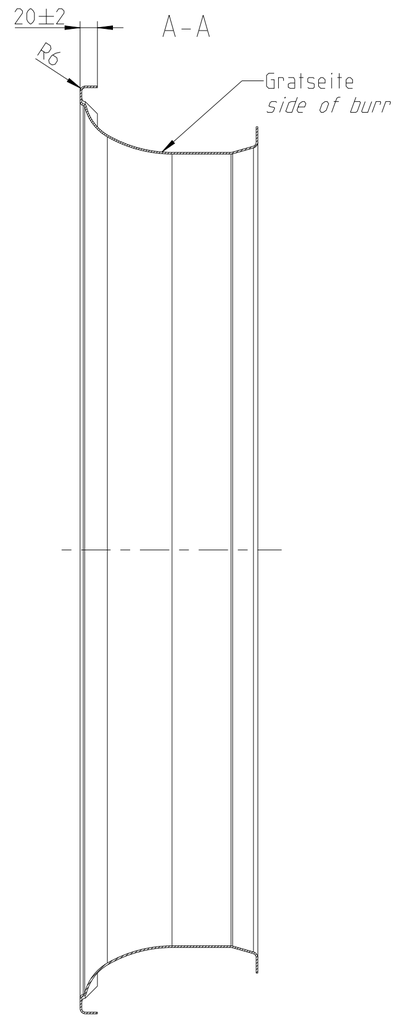

C-C
1:2

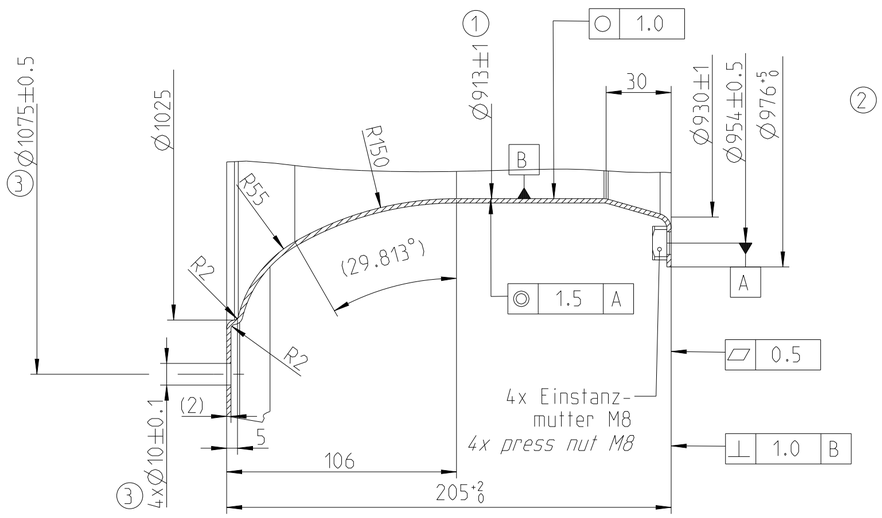

2 Werkstoff: feuerverzinktes Stahlblech nach WN 50008-5-9950
2mm dick
material: hot-dip galvanized sheet metal accordance with WN 50008-5-9950
thickness: 2.0mm

Oberfläche: entsprechend Lackieranweisung 26272-5-9918
surface: according to varnishing instruction 26272-5-9918

Tolerances ISO 2768 -mK-E	ebmpapst ebm-papst Mulfingen GmbH & Co. KG								
Scale 1:5	Wall ring varnished			4	Englisch	27.03.15	Kae	Fit	Deviations
				3	83184	04.07.14	SB		
				2	75909	08.11.11	Kai		
Size 112/910	38913-2-4037		Date	Name	1	61284	13.08.07	CW	
		Designed	30.08.06	CW	Ind.	KM-Nr.	Date	Name	
Distribution Allg. ML/T		Checked			Reason-side			X	
		CAD:	0150493		EC	AC	EV	EP	PF
								Sheet 1 of 1	

Prov.E