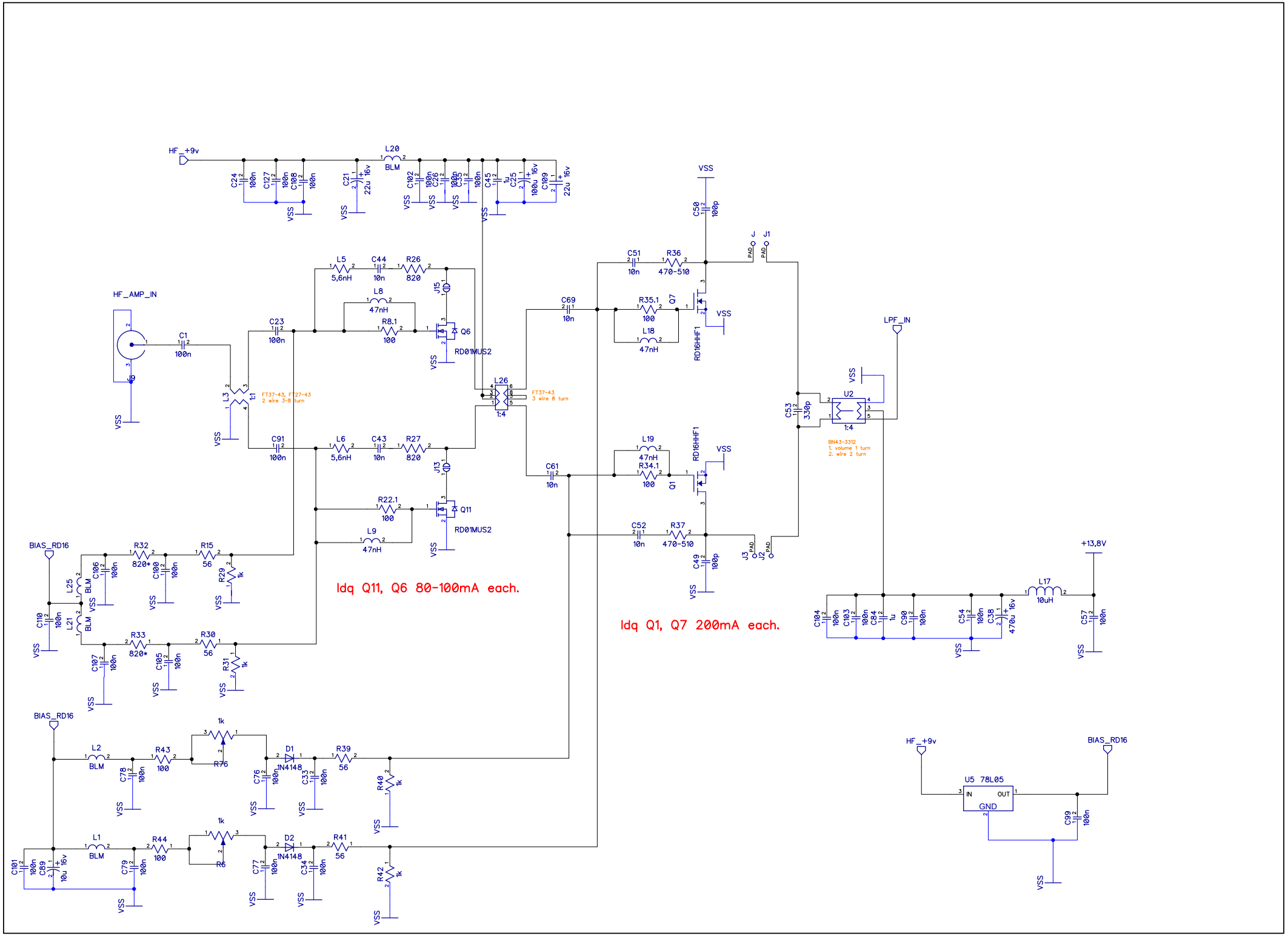
HF_+9v
L20
BLM
C24 100n
C127 100n
C108 100n
C21 22u 16v
C102 100n
C26 100n
C35 100n
C45 1u
C25 100u 16v
C109 22u 16v
VSS
HF_AMP_IN
C1 100n
L3 1:1
FT37-43, FT27-43
2 wire 3-8 turn
C23 100n
C91 100n
L5 5,6nH
C44 10n
R26 820
L8 47nH
R8.1 100
J15
Q6
RD01MUS2
L6 5,6nH
C43 10n
R27 820
J13
R22.1 100
L9 47nH
Q11
RD01MUS2
L26 1:4
FT37-43
3 wire 8 turn
C69 10n
C61 10n
C51 10n
R36 470-510
R35.1 100
L18 47nH
Q7
RD16HHF1
L19 47nH
R34.1 100
Q1
RD16HHF1
C52 10n
R37 470-510
C50 100p
C49 100p
J1
J2
J3
PAD
LPF_IN
C53 330p
U2 1:4
BN43-3312
1. volume 1 turn
2. wire 2 turn
+13,8V
L17 10uH
C104 100n
C103 100n
C84 1u
C90 100n
C54 100n
C38 470u 16v
C57 100n
BIAS_RD16
R32 820*
R15 56
R29 1k
L25 BLM
C106 100n
C100 100n
C110 100n
L21 BLM
R33 820*
R30 56
R31 1k
C107 100n
C105 100n
Idq Q11, Q6 80-100mA each.
Idq Q1, Q7 200mA each.
L2 BLM
R43 100
R76 1k
D1 1N4148
R39 56
R40 1k
C78 100n
C76 100n
C33 100n
L1 BLM
R44 100
R6 1k
D2 1N4148
R41 56
R42 1k
C101 100n
C89 10u 16v
C79 100n
C77 100n
C34 100n
U5 78L05
IN
OUT
GND
C99 100n

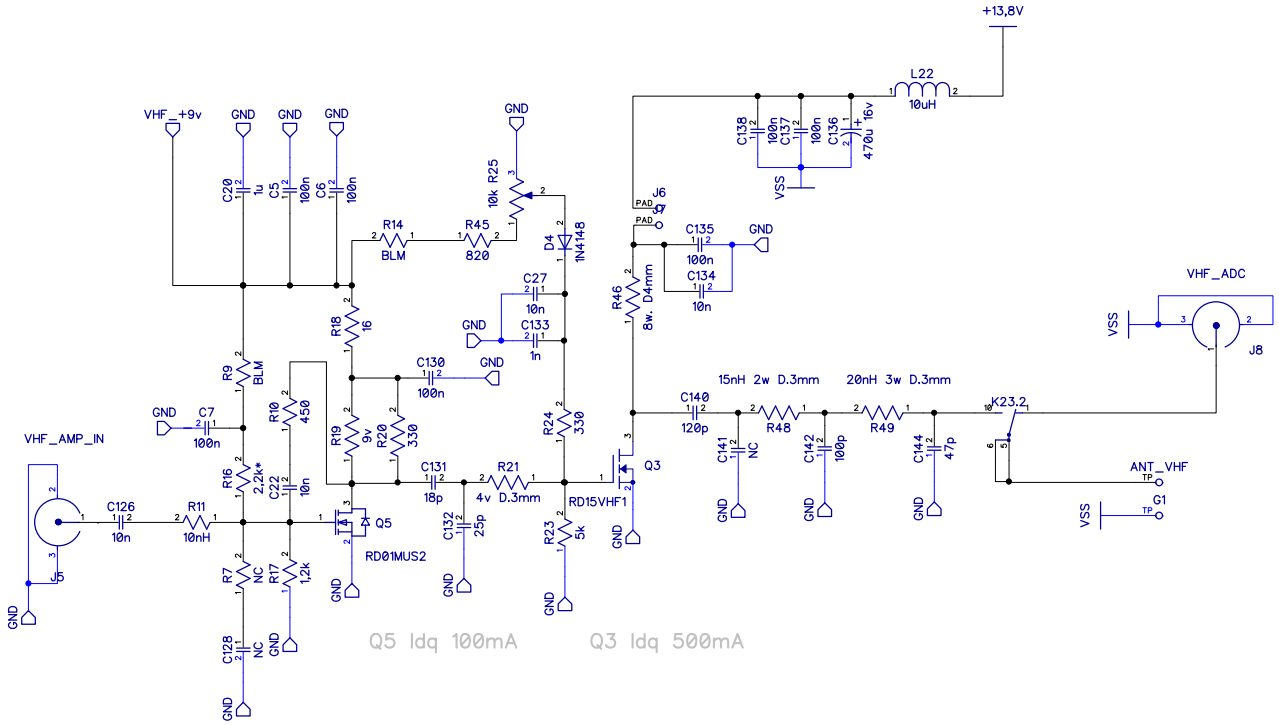
+13,8V
L22
10uH
C138
100n
C137
100n
C136
470u 16v
VSS
VHF_+9v
GND
C20
1u
C5
100n
C6
100n
R14
BLM
R45
820
R25
10k
D4
1N4148
J6
PAD
C135
100n
C134
10n
R46
8w. D4mm
C27
10n
C133
1n
R18
16
C130
100n
R9
BLM
C7
100n
R10
450
R19
9v
R20
330
R24
330
C140
120p
15nH 2w D.3mm
R48
20nH 3w D.3mm
R49
K23.2
VHF_ADC
J8
VHF_AMP_IN
C126
10n
R11
10nH
R16
2.2k*
C22
10n
C131
18p
R21
4v D.3mm
Q3
RD15VHF1
C141
NC
C142
100p
C144
47p
ANT_VHF
G1
J5
Q5
RD01MUS2
C132
25p
R23
5k
R7
NC
R17
1.2k
C128
NC
Q5 Idq 100mA
Q3 Idq 500mA

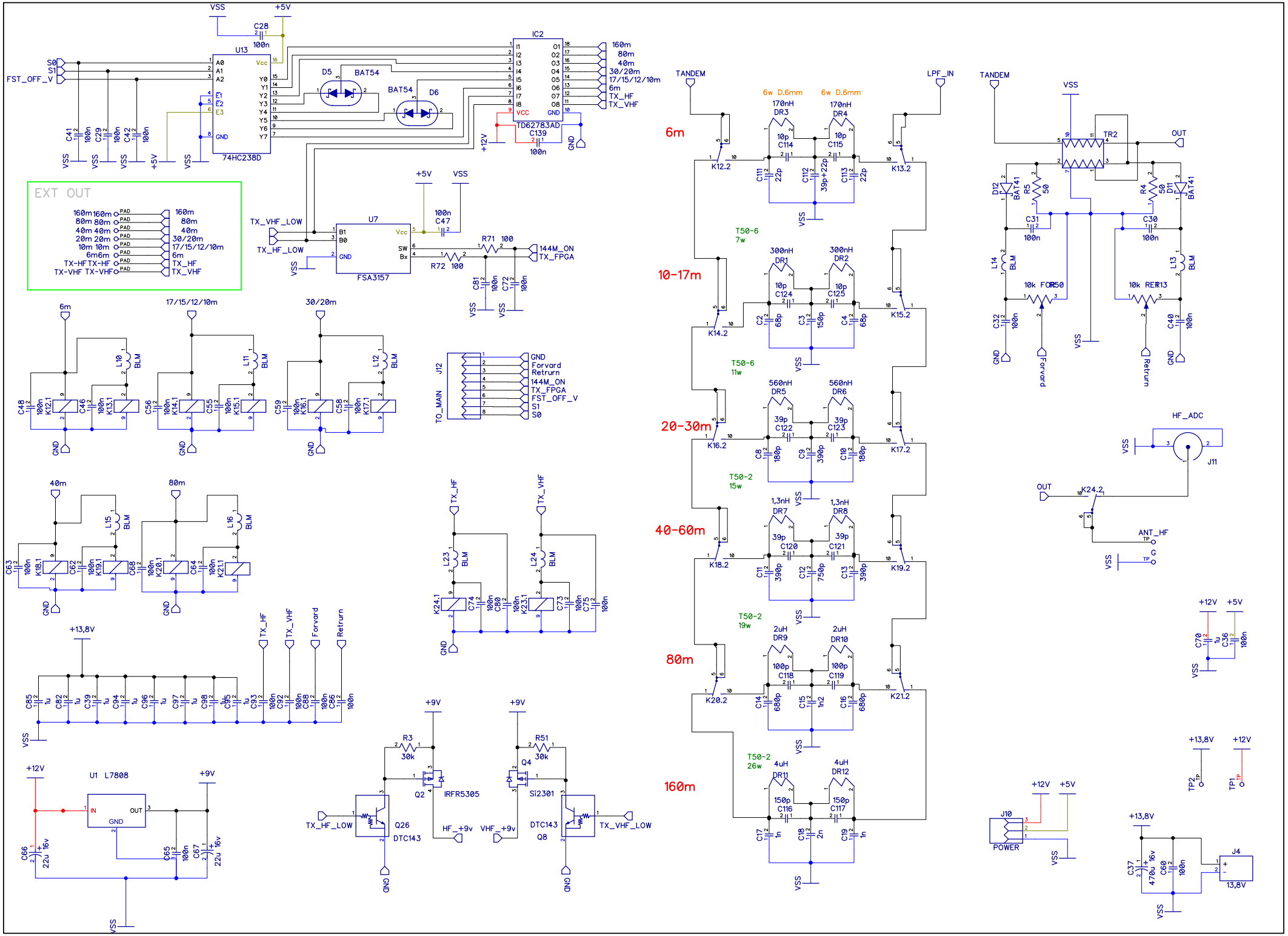
VSS
+5V
C28
100n
U13
74HC238D
S0
S1
FST_OFF_V
A0
A1
A2
E1
E2
E3
GND
Vcc
Y0
Y1
Y2
Y3
Y4
Y5
Y6
Y7
C41
C29
C42
D5
BAT54
D6
IC2
TD62783AD
C139
+12V
160m
80m
40m
30/20m
17/15/12/10m
6m
TX_HF
TX_VHF
EXT OUT
TX_VHF_LOW
TX_HF_LOW
U7
FSA3157
B1
B0
SW
Bx
C47
R71 100
R72 100
144M_ON
TX_FPGA
C81
C72
6m
17/15/12/10m
30/20m
L10
L11
L12
BLM
K12.1
K13.1
K14.1
K15.1
K16.1
K17.1
J12
TO_MAIN
Forvard
Retrurn
40m
80m
L15
L16
K18.1
K19.1
K20.1
K21.1
L23
L24
K24.1
K23.1
+13,8V
Forvard
Retrurn
U1 L7808
IN
OUT
C66
22u 16v
C65
C67
R3
30k
Q2
IRFR5305
Q26
DTC143
HF_+9v
VHF_+9v
R51
Q4
Si2301
Q8
TANDEM
LPF_IN
6w D.6mm
170nH
DR3
DR4
10p
C114
C115
C111
C112
C113
22p
39p+22p
K12.2
K13.2
T50-6
7w
300nH
DR1
DR2
C124
C125
C2
C3
C4
68p
150p
K14.2
K15.2
T50-6
11w
560nH
DR5
DR6
C122
C123
C8
C9
C10
180p
390p
K16.2
K17.2
T50-2
15w
1,3nH
DR7
DR8
C120
C121
C11
C12
C13
750p
K18.2
K19.2
T50-2
19w
2uH
DR9
DR10
100p
C118
C119
C14
C15
C16
680p
1n2
K20.2
K21.2
T50-2
26w
4uH
DR11
DR12
150p
C116
C117
C17
C18
C19
2n
6m
10-17m
20-30m
40-60m
80m
160m
TR2
OUT
D12
BAT41
R5
50
R4
D11
C31
100n
C30
L14
L13
10k FOR50
10k REF13
C32
C40
Forvard
Retrurn
HF_ADC
J11
K24.2
ANT_HF
G
C70
1u
C36
100n
TP2
TP1
J10
POWER
J4
C37
470u 16v
C60
13,8V